Location Entry Codes

As part of CIE's continual commitment to maintaining best practice in assessment, CIE uses different variants of some question papers for our most popular assessments with large and widespread candidature. The question papers are closely related and the relationships between them have been thoroughly established using our assessment expertise. All versions of the paper give assessment of equal standard.

The content assessed by the examination papers and the type of questions is unchanged.

This change means that for this component there are now two variant Question Papers, Mark Schemes and Principal Examiner's Reports where previously there was only one. For any individual country, it is intended that only one variant is used. This document contains both variants which will give all Centres access to even more past examination material than is usually the case.

The diagram shows the relationship between the Question Papers, Mark Schemes and Principal Examiners' Reports that are available.

Question Paper	**Mark Scheme**	**Principal Examiner's Report**
Introduction	Introduction	Introduction
First variant Question Paper	First variant Mark Scheme	First variant Principal Examiner's Report
Second variant Question Paper	Second variant Mark Scheme	Second variant Principal Examiner's Report

Who can I contact for further information on these changes?
Please direct any questions about this to CIE's Customer Services team at:
international@cie.org.uk

The titles for the variant items should correspond with the table above, so that at the top of the first page of the relevant part of the document and on the header, it has the words:

- First variant Question Paper / Mark Scheme / Principal Examiner's Report

or

- Second variant Question Paper / Mark Scheme / Principal Examiner's Report

as appropriate.

First Variant Question Paper

UNIVERSITY OF CAMBRIDGE INTERNATIONAL EXAMINATIONS
General Certificate of Education Advanced Subsidiary Level and Advanced Level

CANDIDATE NAME

CENTRE NUMBER

CANDIDATE NUMBER

1998330602

CHEMISTRY **9701/21**

Paper 2 Structured Questions AS Core **May/June 2009**

1 hour 15 minutes

Candidates answer on the Question Paper.

Additional Materials: Data Booklet

READ THESE INSTRUCTIONS FIRST

Write your name, Centre number and candidate number on all the work you hand in.
Write in dark blue or black pen.
You may use a pencil for any diagrams, graphs, or rough working.
Do **not** use staples, paper clips, highlighters, glue or correction fluid.
DO **NOT** WRITE IN ANY BARCODES.

Answer **all** questions.
You may lose marks if you do not show your working or if you do not use appropriate units.
A Data Booklet is provided.

The number of marks is given in brackets [ ] at the end of each question or part question.
At the end of the examination, fasten all your work securely together.

DO NOT WRITE IN THE GREY AREAS BETWEEN THE PAGES.

For Examiner's Use	
1	
2	
3	
4	
5	
Total	

This document consists of **11** printed pages and **1** blank page.

© UCLES 2009

UNIVERSITY of CAMBRIDGE International Examinations

Answer **all** the questions in the spaces provided.

For Examiner's Use

1 Copper and titanium are each used with aluminium to make alloys which are light, strong and resistant to corrosion.

Aluminium, A*l*, is in the third period of the Periodic Table; copper and titanium are both transition elements.

(a) Complete the electronic configuration of aluminium and of titanium, proton number 22.

A*l*	$1s^2$
Ti	$1s^2$

[1]

Aluminium reacts with chlorine.

(b) (i) Outline how, starting from aluminium powder, this reaction could be carried out in a school or college laboratory to give a small sample of aluminium chloride. A diagram is not necessary.

.....

.....

.....

(ii) Describe what you would see during this reaction.

.....

.....

(iii) At low temperatures, aluminium chloride vapour has the formula Al_2Cl_6.
Draw a 'dot-and-cross' diagram to show the bonding in Al_2Cl_6.
Show outer electrons only.
Represent the aluminium electrons by ●.
Represent the chlorine electrons by ***x***.

[6]

© UCLES 2009

Copper forms two chlorides, $CuCl$ and $CuCl_2$.

For Examiner's Use

(c) When copper is reacted directly with chlorine, only $CuCl_2$ is formed.
Suggest an explanation for this observation.

.....

..... [1]

Titanium also reacts with chlorine.

(d) When an excess of chlorine was reacted with 0.72 g of titanium, 2.85 g of a chloride **A** was formed.

(i) Calculate the amount, in moles, of titanium used.

(ii) Calculate the amount, in moles, of chlorine atoms that reacted.

(iii) Hence, determine the empirical formula of **A**.

(iv) Construct a balanced equation for the reaction between titanium and chlorine.

.....
[4]

(e) At room temperature, the chloride of titanium, **A**, is a liquid which does not conduct electricity.

What does this information suggest about the bonding and structure in **A**?

.....

.....

..... [2]

[Total: 14]

© UCLES 2009

[Turn over

For Examiner's Use

2 Magnesium will react on heating with chlorine, or oxygen, or nitrogen to give the chloride, or oxide, or nitride respectively. Each of these compounds is ionic and in them magnesium has the same +2 oxidation state.

(a) (i) Write an equation, with state symbols, for the **second** ionisation energy of magnesium.

.....

(ii) Use the *Data Booklet* to calculate the enthalpy change that occurs when one mole of gaseous magnesium ions, Mg^{2+}, is formed from one mole of gaseous magnesium atoms.

Include a sign in your answer.

enthalpy change = …… kJ mol^{-1}
[3]

(b) Separate samples of magnesium chloride and magnesium oxide are shaken with water. In **each** case, describe what you would see when this is done, and state the approximate pH of the water after the solid has been shaken with it.

(i) magnesium chloride

observation .....

approximate pH of the water ……

(ii) magnesium oxide

observation .....

approximate pH of the water ……

[4]

© UCLES 2009

(c) Magnesium burns in nitrogen to give magnesium nitride, a yellow solid which has the formula Mg_3N_2.

For Examiner's Use

Magnesium nitride reacts with water to give ammonia and magnesium hydroxide.

(i) Construct an equation for the reaction of magnesium nitride with water.

.....

(ii) Does a redox reaction occur when magnesium nitride reacts with water?

Use the oxidation numbers of nitrogen to explain your answer.

.....

.....

.....

.....

[4]

[Total: 11]

For Examiner's Use

3 Concern over the ever-increasing use of fossil fuels has led to many suggestions for alternative sources of energy. One of these, suggested by Professor George Olah, winner of a Nobel Prize in chemistry, is to use methanol, CH_3OH, which can be obtained in a number of different ways.

Methanol could be used instead of petrol in a conventional internal combustion engine or used to produce electricity in a fuel cell.

(a) Construct a balanced equation for the **complete** combustion of methanol.

..... [1]

When hydrocarbon fuels are completely burned in an internal combustion engine, several toxic pollutants may be formed.

(b) State **two toxic** pollutants that can be produced after **complete** combustion of a hydrocarbon fuel in an internal combustion engine.

.....

..... [2]

Methanol may be manufactured catalytically from *synthesis gas*, a mixture of CO, CO_2 and H_2. The CO is reacted with H_2 to form methanol, CH_3OH.

$$CO(g) + 2H_2(g) \rightleftharpoons CH_3OH(g) \qquad \Delta H = -91 \text{ kJ mol}^{-1}$$

(c) From your understanding of Le Chatelier's principle, state **two** conditions that could be used in order to produce a high yield of methanol.

In **each** case, explain why the yield would increase.

condition 1 .....

explanation .....

.....

condition 2 .....

explanation .....

..... [4]

© UCLES 2009

Carbon monoxide, which can be used to make methanol, may be formed by reacting carbon dioxide with hydrogen.

For Examiner's Use

$$CO_2(g) + H_2(g) \rightleftharpoons CO(g) + H_2O(g) \qquad K_c = 1.44 \text{ at } 1200 \text{ K}$$

(d) (i) It has been suggested that, on a large scale, this reaction could be helpful to the environment.

Explain, with reasons, why this would be the case.

.....

.....

(ii) A mixture containing 0.50 mol of CO_2, 0.50 mol of H_2, 0.20 mol of CO and 0.20 mol of H_2O was placed in a 1.0 dm^3 flask and allowed to come to equilibrium at 1200 K.

Calculate the amount, in moles, of each substance present in the equilibrium mixture at 1200 K.

	CO_2	+	H_2	$\rightleftharpoons$	CO	+	H_2O
initial moles	0.50		0.50		0.20		0.20

[6]

[Total: 13]

4 **(a)** Complete the following reaction scheme which starts with ethanal.

For Examiner's Use

In **each empty** box, write the **structural formula** of the organic compound that would be formed.

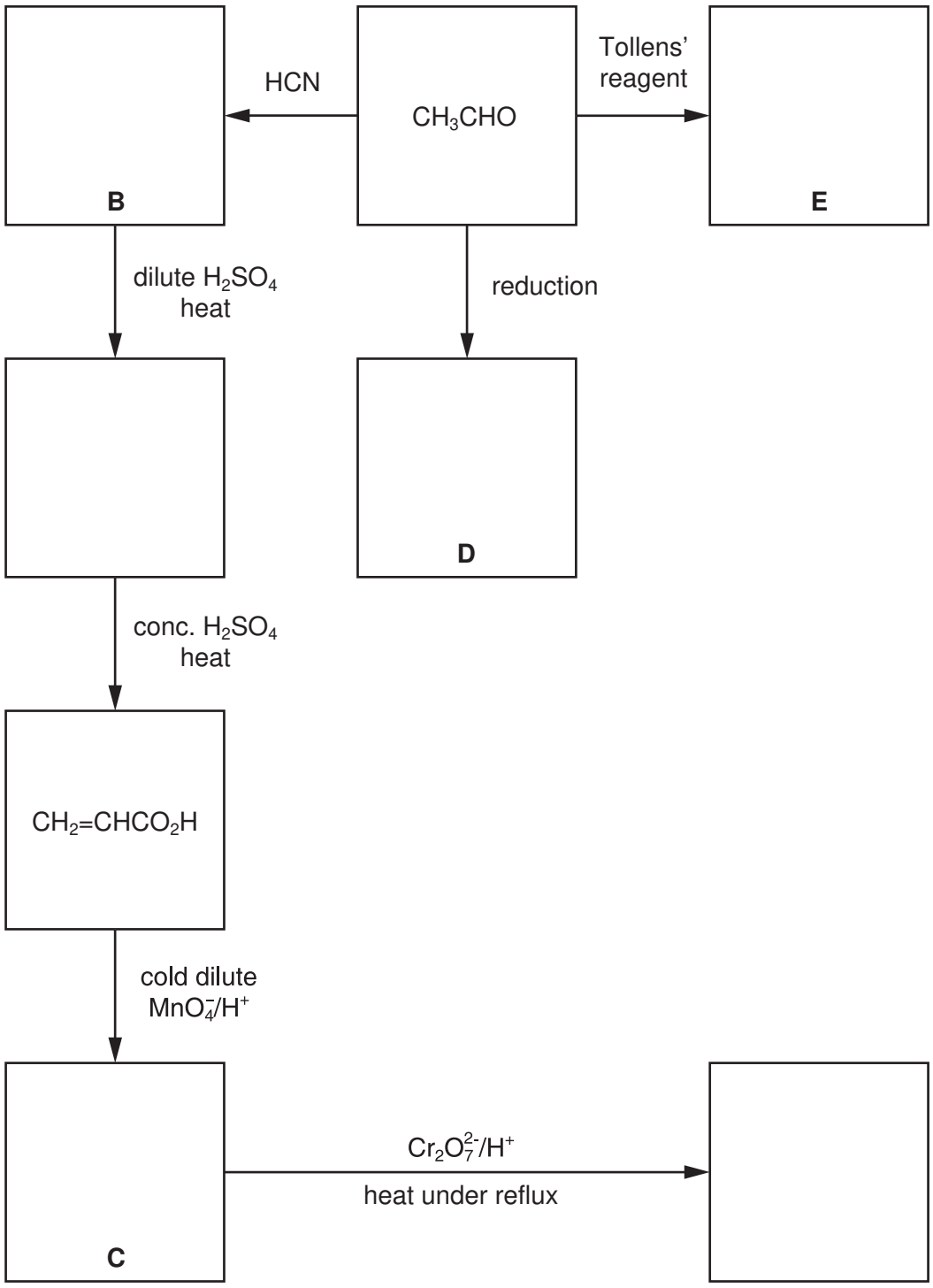

[6]

For Examiner's Use

(b) Write the structural formula for the organic compound formed when, under suitable conditions,

(i) compound **C** reacts with compound **D**,

(ii) compound **C** reacts with compound **E**.

[2]

(c) Compound **B** is chiral. Draw displayed formulae of the two optical isomers of compound **B**, indicating with an asterisk (*) the chiral carbon atom.

[3]

[Total: 11]

5 Propanone, CH_3COCH_3, an important industrial solvent, can be converted into another industrially important solvent, MIBK, by the following sequence.

For Examiner's Use

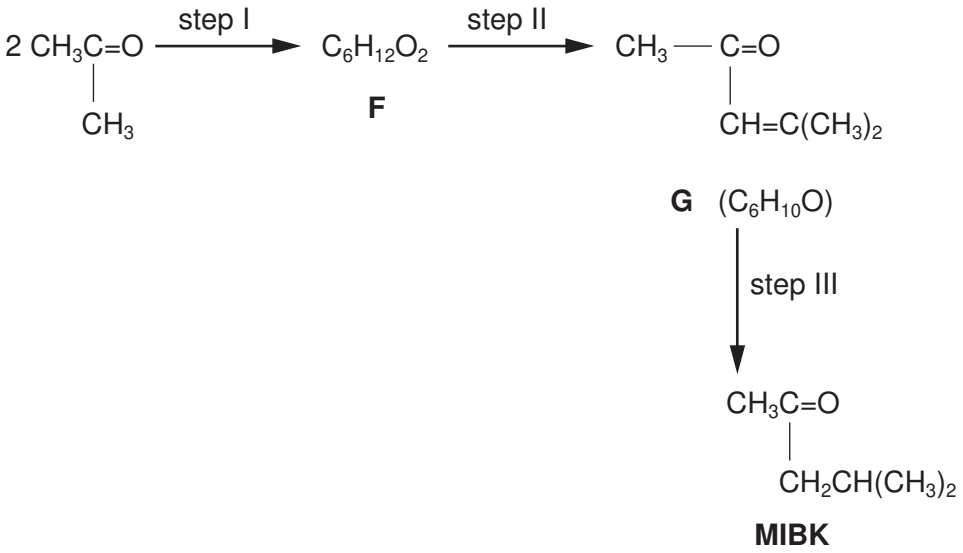

(a) When **F** is formed in step I no other compound is produced.
Suggest a structural formula for **F**, which contains one –OH group.

[1]

(b) Compound **G** has two functional groups.

Name **one** functional group present in **G** and show how you would identify it. Put your answers in the table.

functional group in **G**	reagent used in test	what would be seen

[3]

(c) **G** is formed from **F** in step II.
Use your answers to **(a)** and **(b)** to suggest

(i) what type of reaction occurs in step II,

.....

(ii) a reagent for step II.

..... [2]

© UCLES 2009

For Examiner's Use

(d) The production of MIBK from **G** in step III involves the hydrogenation of the >C=C< group and is carried out catalytically. A mixture of compounds is formed because the >C=O group is also reduced.

What reagent(s) and solvent are normally used in a laboratory to reduce a >C=O group without reducing a >C=C< group present in the same molecule?

reagent(s) .....

solvent ..... [2]

G has a number of structural isomers.

(e) Draw the displayed formulae of a pair of structural isomers of **G** which contain the $CH_3CO–$ group and which exhibit *cis-trans* isomerism.

Label each structure *cis* or *trans* and give your reasoning.

[3]

[Total: 11]

© UCLES 2009

BLANK PAGE

Permission to reproduce items where third-party owned material protected by copyright is included has been sought and cleared where possible. Every reasonable effort has been made by the publisher (UCLES) to trace copyright holders, but if any items requiring clearance have unwittingly been included, the publisher will be pleased to make amends at the earliest possible opportunity.

University of Cambridge International Examinations is part of the Cambridge Assessment Group. Cambridge Assessment is the brand name of University of Cambridge Local Examinations Syndicate (UCLES), which is itself a department of the University of Cambridge.

Second Variant Question Paper

UNIVERSITY OF CAMBRIDGE INTERNATIONAL EXAMINATIONS
General Certificate of Education Advanced Subsidiary Level and Advanced Level

CANDIDATE NAME									
CENTRE NUMBER						CANDIDATE NUMBER				

* 1 6 0 1 3 8 4 7 8 6 *

CHEMISTRY **9701/22**

Paper 2 Structured Questions AS Core **May/June 2009**

1 hour 15 minutes

Candidates answer on the Question Paper.

Additional Materials: Data Booklet

READ THESE INSTRUCTIONS FIRST

Write your name, Centre number and candidate number on all the work you hand in.
Write in dark blue or black pen.
You may use a pencil for any diagrams, graphs, or rough working.
Do **not** use staples, paper clips, highlighters, glue or correction fluid.
DO **NOT** WRITE IN ANY BARCODES.

Answer **all** questions.
You may lose marks if you do not show your working or if you do not use appropriate units.
A Data Booklet is provided.

The number of marks is given in brackets [ ] at the end of each question or part question.
At the end of the examination, fasten all your work securely together.

DO NOT WRITE IN THE GREY AREAS BETWEEN THE PAGES.

For Examiner's Use	
1	
2	
3	
4	
5	
Total	

This document consists of **11** printed pages and **1** blank page.

© UCLES 2009

Answer **all** the questions in the spaces provided.

For Examiner's Use

1 Copper and titanium are each used with aluminium to make alloys which are light, strong and resistant to corrosion.

Aluminium, A*l*, is in the third period of the Periodic Table; copper and titanium are both transition elements.

(a) Complete the electronic configuration of aluminium and of titanium, proton number 22.

A*l*	$1s^2$
Ti	$1s^2$

[1]

Aluminium reacts with chlorine.

(b) (i) Outline how, starting from aluminium powder, this reaction could be carried out in a school or college laboratory to give a small sample of aluminium chloride. A diagram is not necessary.

.....

.....

.....

(ii) Describe what you would see during this reaction.

.....

.....

(iii) At low temperatures, aluminium chloride vapour has the formula Al_2Cl_6.
Draw a 'dot-and-cross' diagram to show the bonding in Al_2Cl_6.
Show outer electrons only.
Represent the aluminium electrons by ●.
Represent the chlorine electrons by ***x***.

[6]

© UCLES 2009

Copper forms two chlorides, $CuCl$ and $CuCl_2$.

For Examiner's Use

(c) When copper is reacted directly with chlorine, only $CuCl_2$ is formed.
Suggest an explanation for this observation.

.....

..... [1]

Titanium also reacts with chlorine.

(d) When an excess of chlorine was reacted with 0.72 g of titanium, 2.85 g of a chloride **A** was formed.

(i) Calculate the amount, in moles, of titanium used.

(ii) Calculate the amount, in moles, of chlorine atoms that reacted.

(iii) Hence, determine the empirical formula of **A**.

(iv) Construct a balanced equation for the reaction between titanium and chlorine.

.....
[4]

(e) At room temperature, the chloride of titanium, **A**, is a liquid which does not conduct electricity.

What does this information suggest about the bonding and structure in **A**?

.....

.....

..... [2]

[Total: 14]

© UCLES 2009

[Turn over

For Examiner's Use

2 Phosphorus is a very reactive non-metallic element which readily forms ionic compounds with metals such as calcium and covalent compounds with non-metals such as chlorine and oxygen.

(a) (i) Write an equation, with state symbols, for the **second** ionisation energy of calcium.

.....

(ii) Use the *Data Booklet* to calculate the enthalpy change that occurs when one mole of gaseous calcium ions, Ca^{2+}, is formed from one mole of gaseous calcium atoms.
Include a sign in your answer.

enthalpy change = ... kJ mol^{-1} [3]

(b) Separate small samples of phosphorus(V) chloride and phosphorus(V) oxide are shaken with water. In **each** case, describe what you would see when this is done, and state the approximate pH of the water after the solid has been shaken with it.

(i) phosphorus(V) chloride

observation .....

approximate pH of the water .....

(ii) phosphorus(V) oxide

observation .....

approximate pH of the water ..... [4]

© UCLES 2009

(c) When phosphorus is heated with an excess of sulfur in an inert atmosphere, a pale yellow solid, with formula P_4S_{10} is formed.
P_4S_{10} reacts with water to give phosphoric acid, H_3PO_4, and hydrogen sulfide, H_2S.

For Examiner's Use

(i) Complete the equation for the reaction of P_4S_{10} with water.

$P_4S_{10} + 16H_2O \rightarrow$

(ii) Does a redox reaction occur when P_4S_{10} reacts with water?
Use the oxidation numbers of phosphorus to explain your answer.

.....

.....

.....

..... [4]

[Total: 11]

For Examiner's Use

3 Concern over the ever-increasing use of fossil fuels has led to many suggestions for alternative sources of energy. One of these, suggested by Professor George Olah, winner of a Nobel Prize in chemistry, is to use methanol, CH_3OH, which can be obtained in a number of different ways.

Methanol could be used instead of petrol in a conventional internal combustion engine or used to produce electricity in a fuel cell.

(a) Construct a balanced equation for the **complete** combustion of methanol.

..... [1]

When hydrocarbon fuels are completely burned in an internal combustion engine, several toxic pollutants may be formed.

(b) State **two toxic** pollutants that can be produced after **complete** combustion of a hydrocarbon fuel in an internal combustion engine.

.....

..... [2]

Methanol may be manufactured catalytically from *synthesis gas*, a mixture of CO, CO_2 and H_2. The CO is reacted with H_2 to form methanol, CH_3OH.

$$CO(g) + 2H_2(g) \rightleftharpoons CH_3OH(g) \qquad \Delta H = -91 \text{ kJ mol}^{-1}$$

(c) From your understanding of Le Chatelier's principle, state **two** conditions that could be used in order to produce a high yield of methanol.

In **each** case, explain why the yield would increase.

condition 1 .....

explanation .....

.....

condition 2 .....

explanation .....

..... [4]

© UCLES 2009

Carbon monoxide, which can be used to make methanol, may be formed by reacting carbon dioxide with hydrogen.

For Examiner's Use

$$CO_2(g) + H_2(g) \rightleftharpoons CO(g) + H_2O(g) \qquad K_c = 1.44 \text{ at } 1200 \text{ K}$$

(d) (i) It has been suggested that, on a large scale, this reaction could be helpful to the environment.

Explain, with reasons, why this would be the case.

.....

.....

(ii) A mixture containing 0.50 mol of CO_2, 0.50 mol of H_2, 0.20 mol of CO and 0.20 mol of H_2O was placed in a 1.0 dm^3 flask and allowed to come to equilibrium at 1200 K.

Calculate the amount, in moles, of each substance present in the equilibrium mixture at 1200 K.

	CO_2	+	H_2	$\rightleftharpoons$	CO	+	H_2O
initial moles	0.50		0.50		0.20		0.20

[6]

[Total: 13]

4 **(a)** Complete the following reaction scheme which starts with propanone.
In **each empty** box, write the **structural formula** of the organic compound that would be formed.

For Examiner's Use

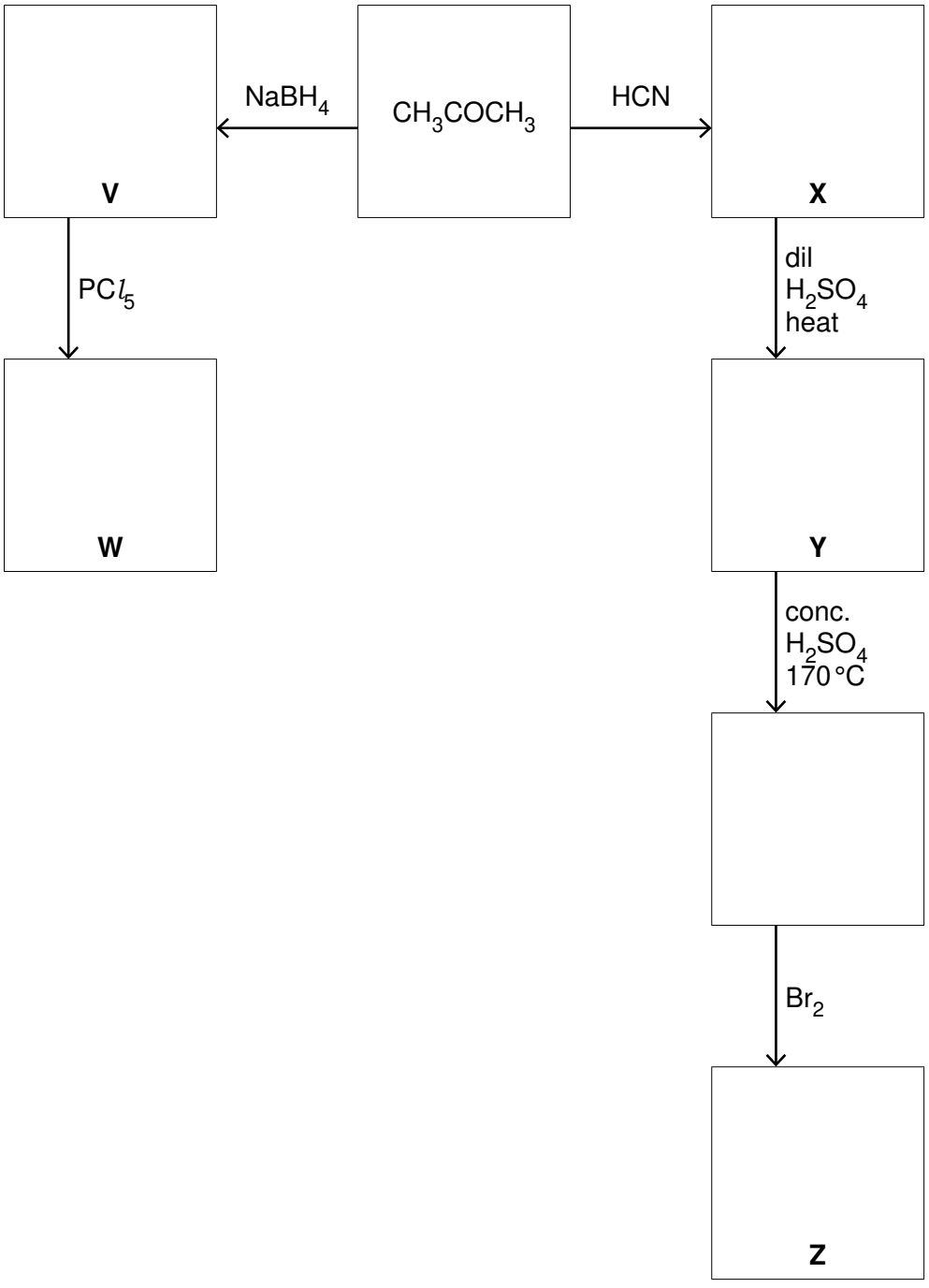

[6]

(b) One of the compounds **V**, **W**, **X**, **Y** or **Z** is chiral.

For Examiner's Use

(i) Identify this compound by its letter.

.....

(ii) Draw displayed formulae of the two optical isomers of this compound. Indicate with an asterisk (*) the chiral carbon atom.

[3]

(c) Write the structural formula for the organic compound formed when, under suitable conditions,

(i) compound **Y** reacts with compound **V**,

(ii) compound **Y** reacts with compound **Z**.

[2]

[Total: 11]

5 Ethanal, CH_3CHO, can be converted into compound **U** by the following sequence.

For Examiner's Use

$$2\ CH_3CHO \xrightarrow{\text{step I}} C_4H_8O_2 \xrightarrow{\text{step II}} CH_3CH{=}CHCHO$$

T **U**, C_4H_6O

(a) When **T** is formed in step I, no other compound is produced.

Suggest a structural formula for **T** which contains one –OH group in its molecule.

[1]

(b) Compound **U** has two functional groups.

You are to name **one** functional group present in **U** and show how you would identify it. Put your answers in the table.

functional group in **U**	reagent used in test	what would be seen

[3]

(c) **U** is formed from **T** in step II.
Use your answers to **(a)** and **(b)** to suggest

(i) what type of reaction occurs in step II,

.....

(ii) a reagent for step II.

..... [2]

© UCLES 2009

For Examiner's Use

(d) Compound **U** can be converted into $CH_3CH{=}CHCH_2OH$.

What reagent(s) and solvent are normally used in a laboratory to reduce a >C=O group without reducing a >C=C< group present in the same molecule?

reagent(s) .....

solvent ..... [2]

U has three structural isomers.

(e) Draw the displayed formulae of **two** structural isomers of **U** that each contain the same functional groups as **U**.

[2]

(f) When a mixture of ethanal and propanal is reacted under the same conditions as in step I above, a similar reaction occurs with the formation of compound **S**, $C_5H_{10}O_2$.

$CH_3CHO + CH_3CH_2CHO \rightarrow C_5H_{10}O_2$

Suggest a structural formula for **S**.

[1]

[Total: 11]

© UCLES 2009

BLANK PAGE

Permission to reproduce items where third-party owned material protected by copyright is included has been sought and cleared where possible. Every reasonable effort has been made by the publisher (UCLES) to trace copyright holders, but if any items requiring clearance have unwittingly been included, the publisher will be pleased to make amends at the earliest possible opportunity.

University of Cambridge International Examinations is part of the Cambridge Assessment Group. Cambridge Assessment is the brand name of University of Cambridge Local Examinations Syndicate (UCLES), which is itself a department of the University of Cambridge.